FENDER "BANDMASTER" SCHEMATIC

MODEL 5E7

E-EE

NOTICE
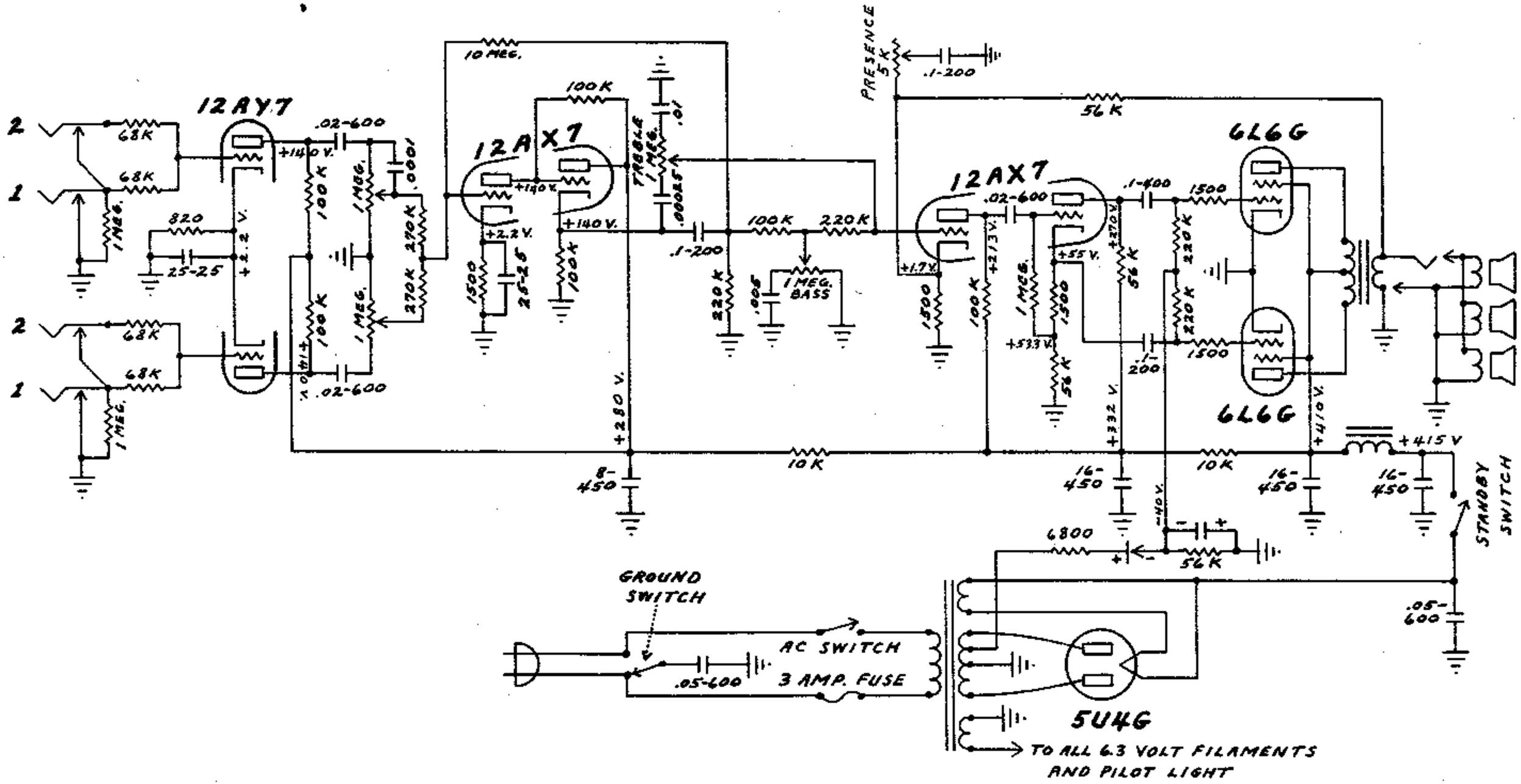
VOLTAGES READ TO GROUND WITH ELECTRONIC VOLTMETER VALUES SHOWN + OR − 20 %