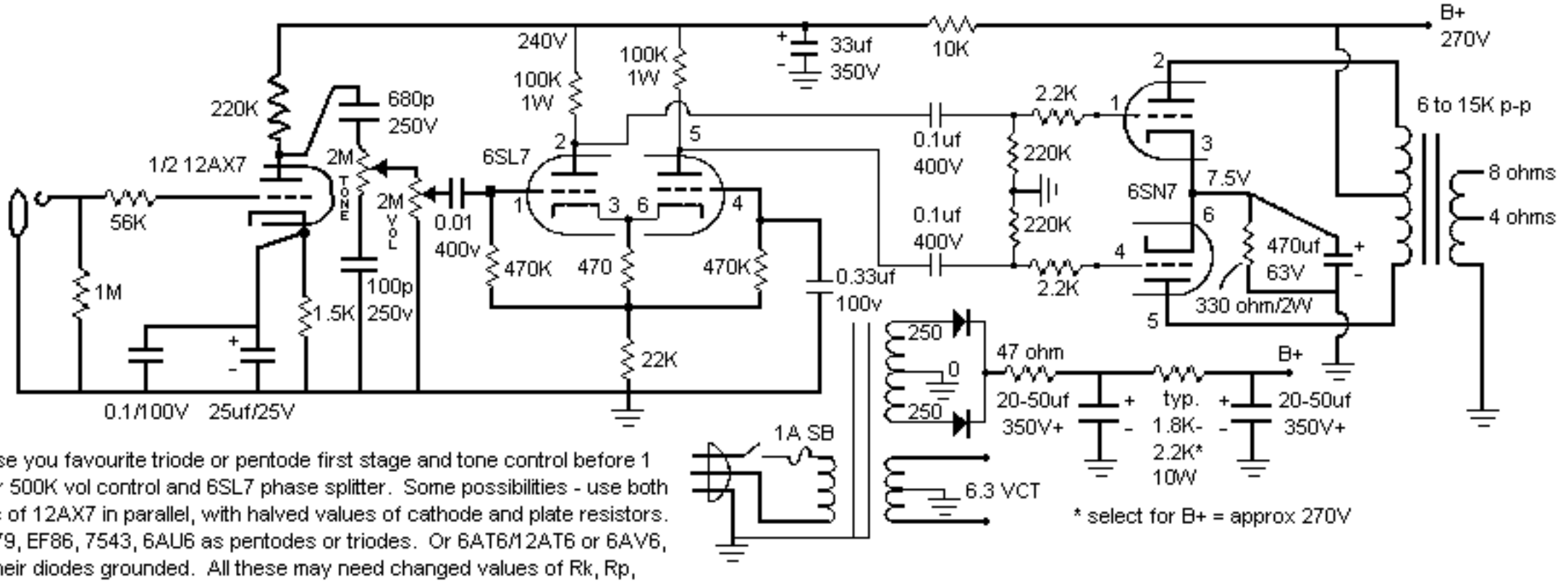

...or use you favourite triode or pentode first stage and tone control before 1 Meg or 500K vol control and 6SL7 phase splitter. Some possibilities - use both halves of 12AX7 in parallel, with halved values of cathode and plate resistors. Or 5879, EF86, 7543, 6AU6 as pentodes or triodes. Or 6AT6/12AT6 or 6AV6, with their diodes grounded. All these may need changed values of Rk, Rp, (plus Rs, Cs for pentodes). BTW, this amp works just as well with 12SN7 and 12SL7 if you substitute 12v heater supply. 12AX7 can be wired for 6 or 12v. Musicworks tranny sets accept 117/230V input, and run 6 or 12v heaters.

'MOONLIGHT' AMP About 1 watt

STEPHEN DELFT JAN 98
Email: postmaster@musicworks.co.nz