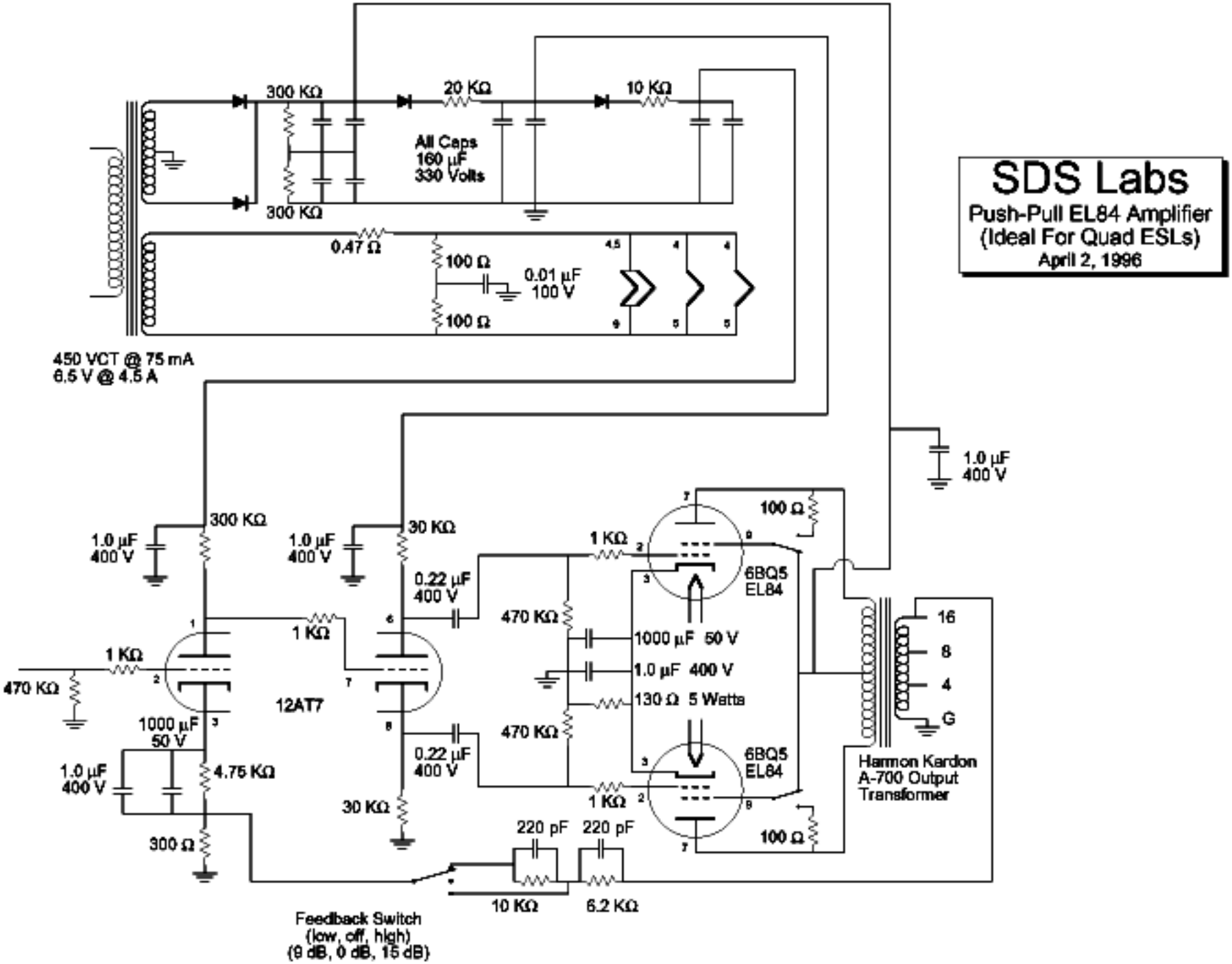
SDS Labs
Push-Pull EL84 Amplifier
(Ideal For Quad ESLs)
April 2, 1996
300 KΩ
20 KΩ
10 KΩ
All Caps
160 µF
330 Volts
300 KΩ
0.47 Ω
100 Ω
0.01 µF
100 V
100 Ω
450 VCT @ 75 mA
6.5 V @ 4.5 A
1.0 µF
400 V
300 KΩ
1.0 µF
400 V
30 KΩ
1.0 µF
400 V
1 KΩ
470 KΩ
12AT7
1000 µF
50 V
1.0 µF
400 V
4.75 KΩ
300 Ω
1 KΩ
0.22 µF
400 V
30 KΩ
0.22 µF
400 V
470 KΩ
470 KΩ
1 KΩ
1 KΩ
100 Ω
6BQ5
EL84
1000 µF 50 V
1.0 µF 400 V
130 Ω 5 Watts
6BQ5
EL84
100 Ω
1.0 µF
400 V
16
8
4
G
Harmon Kardon
A-700 Output
Transformer
220 pF
220 pF
10 KΩ
6.2 KΩ
Feedback Switch
(low, off, high)
(9 dB, 0 dB, 15 dB)